PUMPS

GD 2500Q HDF

FRAC & WELL SERVICE PUMP

The GD 2500Q Heavy Duty Frame (HDF) quintuplex pump was designed to extend pump service life through an optimized power end frame design. Stable, robust, and durable, the 2500Q HDF features thicker skin plates and stronger welds to boost structural integrity.



SPECIFICATIONS

Maximum Input	2500 BHP (1864 kW)
Maximum RPM	330 RPM
No. of Plungers	5
Stroke Length	8 in. (203mm)
Plunger Load	196,350 lbs (89,000 kg)
Pump Weight	15,107 lbs. (6,852 kg)
Gear Ratio	6,353:1

PLUNGER DIAMETER		DISPLACEMENT PER REVOLUTION		DISPLACEMENT @PUMP RPM 50				DISPLACEMENT @PUMP RPM 150				DISPLACEMENT @PUMP RPM 250				DISPLACEMENT @PUMP RPM 330			
in.	mm.	Gal/Rev.	m^3	GPM	LPM	PSI	bar	GPM	LPM	PSI	bar	GPM	LPM	PSI	bar	GPM	LPM	PSI	bar
Forged Steel Autofrettaged High Pressure Valve Over Valve Fluid Ends																			
3.75	95	1.91	7.24	191	724	17800	1251	287	1085	13500	949	478	1809	8100	569	631	2388	6100	429
4	102	2.17	8.23	217	823	15600	1097	326	1235	11800	830	544	2058	7100	499	718	2717	5400	380
4.5	114	2.75	10.42	275	1042	12400	872	413	1563	9300	654	688	2605	5600	394	908	3438	4200	295
5	127	3.40	12.8	340	1286	10000	703	510	1930	7600	534	850	3216	4500	316	1121	4245	3400	239
5.5	140	4.11	15.56	411	1556	8300	584	617	2335	6300	443	1028	3891	3800	267	1357	5136	2800	19

*Contact GD Energy Products engineering for application review and approval

GD 2500Q HDF
FRAC & WELL SERVICE PUMP

SPECIFICATIONS

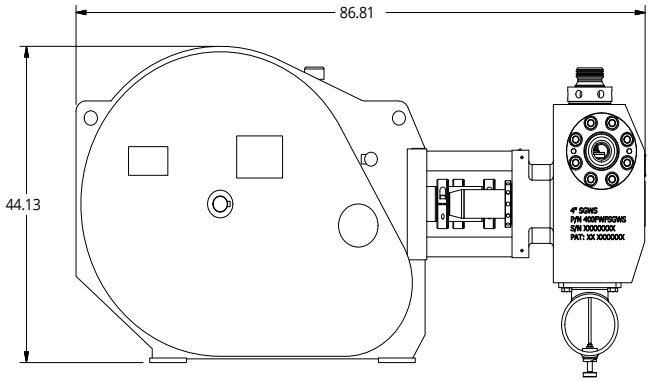

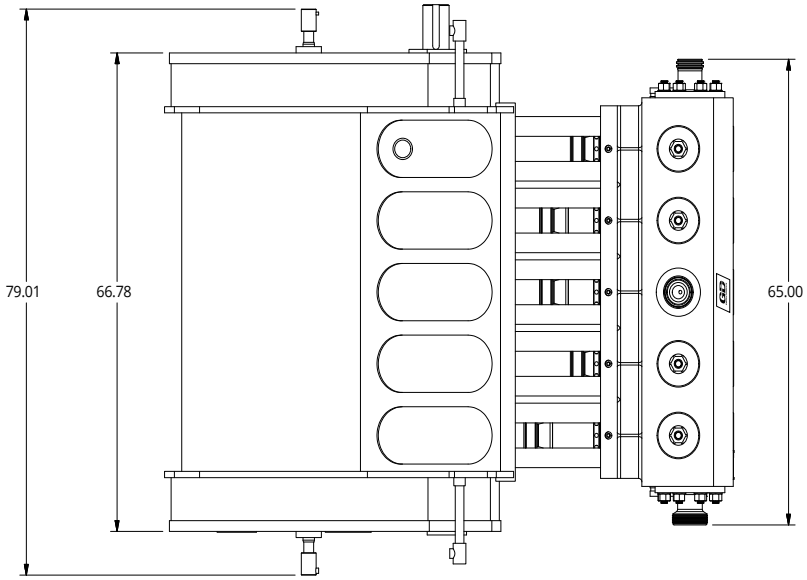

NOTE: Installation drawing shown with Next Generation fluid end geometry. Additional drawings are available from engineering per application.

STANDARD FEATURES

- Optimized power end frame design reduces operating stresses and maximizes frame reliability
- Enhanced service life expectations
- Industry leading Redline packing available with adjustable header single or double pressure ring styles
- Pressurized lubrication through the crankshaft
- Hardened clamp type extension rods
- GDEP hard coated plungers
- GDEP wing guided valves and seats
- Single or dual bolted steel WECO style discharge flanges
- Schedule 80 steel suction manifold with victaulic coupling
- GDNX FE technology features a patent-pending cross-bore design optimized to provide longer fluid end life in severe duty pumping applications
- GDNX features Falcon Technology, which reduces maintenance time for consumable changes
- No alignment requirements to suction covers and no special tooling required for install, reducing maintenance challenges