GD 3500

TRUE 3500 BHP PURPOSE-BUILT FOR DURABILITY AND IMPROVED SERVICEABILITY

The GD 3500 delivers true 3,500 BHP continuous-duty performance in a standard 52-inch footprint. Engineered from the power end to the fluid end for greater durability and easier serviceability, it helps operators maximize available horsepower while simplifying maintenance.



SPECIFICATIONS

Max Input	3500 BHP
Max Speed	330 RPM
Rod Load	260,000 lbs.
Stroke Length	8”
Pump Weight	24,250 lbs.
Gear Ratio	6.333:1

PLUNGER DIAMETER		PLUNGER AREA		DISPLACEMENT PER REVOLUTION		DISPLACEMENT AT INPUT RPM (PUMP RPM) - CONTINUOUS SERVICE																			
						100				150				200				250				300				330			
						633				950				1267				1583				1900				2090			
in.	mm.	in²	mm²	Gal/ Rev.	m³	GPM	m³/hr	PSI	bar	GPM	m³/hr	PSI	bar	GPM	m³/hr	PSI	bar	GPM	m³/hr	PSI	bar	GPM	m³/hr	PSI	bar	GPM	m³/hr	PSI	bar
4.5	114	15.9	10,261	2.8	0.010	275	63	16,348	1127	413	94	13,070	901	551	125	9,802	676	688	156	7,842	541	826	188	6,535	451	909	206	5,941	410
5.0	127	19.6	12,668	3.4	0.013	340	77	13,242	913	510	116	10,586	730	680	154	7,940	547	850	193	6,352	438	1,020	232	5,293	365	1,122	255	4,812	332

*Contact your GDEP representative for alternative plunger sizes

GD 3500

TRUE 3500 BHP PURPOSE-BUILT FOR DURABILITY AND IMPROVED SERVICEABILITY

SPECIFICATIONS

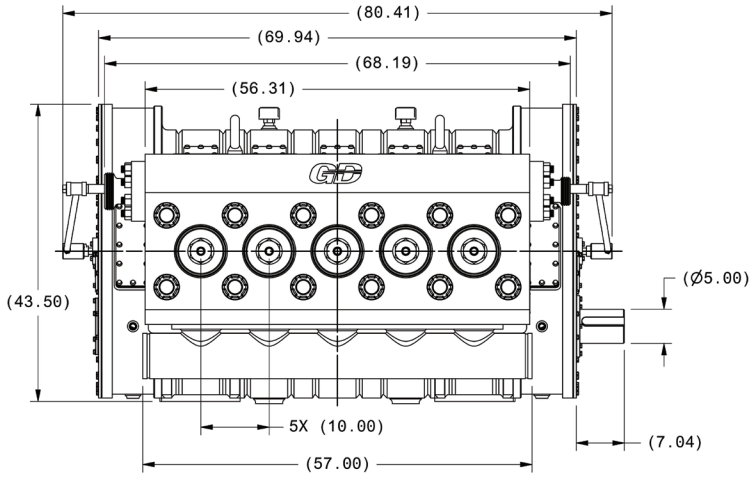

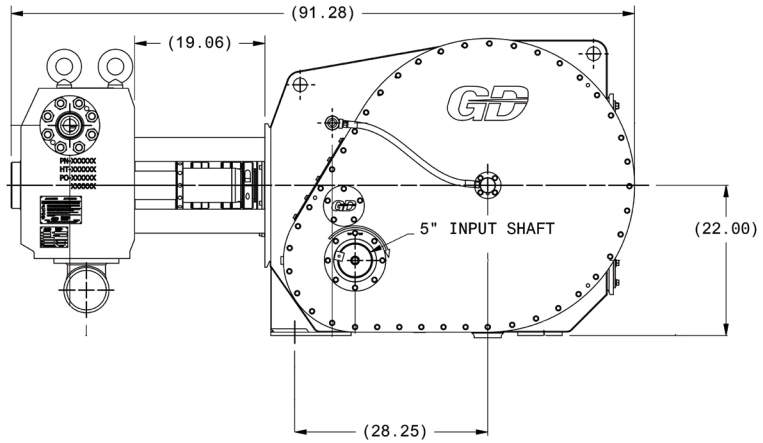

*Contact your GDEP representative for additional dimensions

STANDARD FEATURES

- **High-Strength Frame Construction:** Built to withstand the higher loads and demands of continuous 3,500 BHP operation.
- **Enhanced Bearing Capacity:** Larger roller bearings support higher loads and continuous-duty operation.
- **Purpose-Built Crankshaft and Connecting Rod Assembly:** Engineered to support continuous 3,500 BHP performance.
- **Optimized Gear Alignment:** Advanced gearset geometry supports long-term performance at 100% rod load and 3,500 BHP.
- **Reinforced Suction Bore Thread Design:** Longer thread engagement improves fatigue life at a common failure point.
- **Heavy-Duty Retainer Design:** Reduces thread deflection and retainer movement under high operating loads.
- **Optimized Cross Bore Geometry:** Maximizes cross bore fatigue life under higher pressure demands.
- **Bolt-On Stuffing Box:** Simplifies replacement, reduces weld repairs, and helps extend fluid end service life.
- **12 Tie Rod Architecture:** Long-life through tie rods use 40% fewer fasteners and enable full front-access maintenance.